www.reelschematic.com

Daiwa
COMMITTED TO TOTAL QUALITY

SPINNING REEL SGA1655/2055/GS900RDA

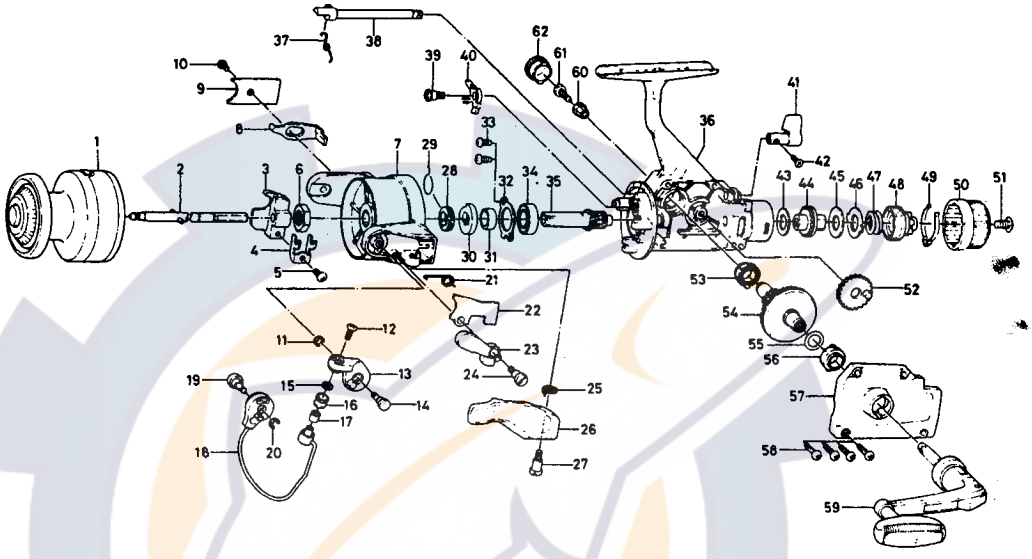

Key No.	Parts No.	Parts Name
* 1		Spool
2	B83-9801	Main shaft
3	B64-0102	Oscillating slider
4	B49-2501	Oscillating slider retainer
5	351-1804	Oscillating slider screw
6	B43-7601	Rotor nut
7	B82-1901	Rotor
8	B83-6701	Bail kick lever
9	B76-9703	Bail kick lever cover
10	B83-4401	Bail kick lever cover screw
11	320-5901	Arm lever screw retainer
12	B67-9303	Bail screw
13	B67-4601	Arm lever
14	B83-3801	Arm lever screw
15	B55-4301	Bail washer
16	250-3921	Line roller
17	B45-1501	Roller collar
18	B83-6501	Bail
19	B83-4201	Bail holder screw
20	320-5901	Bail holder screw retainer
21	B76-9101	Bail spring
22	B83-6401	Bail spring cover
23	B76-9301	Trigger plate
24	B68-8801	Bail spring cover screw
25	B67-5201	Trigger spring
26	B67-5101	Trigger lever
27	B68-8802	Trigger screw
28	B68-6401	Spring holder
29	145-0901	Anti-reverse claw spring
30	B67-4301	Ratchet
31	B83-6201	Spacing sleeve
32	B35-6301	Ball bearing ret. washer
33	B83-4402	Ball bearing ret. washer screw
34	636-6011	Ball bearing
35	B83-6101	Pinion gear

Key No.	Parts No.	Parts Name
* 36		Body
37	144-0321	Anti-reverse cam spring
38	B83-6001	Anti-reverse cam
39	B83-6301	Anti-reverse claw screw
40	B74-5501	Anti-reverse claw
41	B63-8101	Anti-reverse lever
42	B12-8201	Anti-reverse lever screw
43	B46-9504	Drag washer A
44	B76-9802	Click gear
45	B78-6601	Drag washer B
46	B83-9501	Drag washer C
47	B91-3701	Drag knob spring
48	B77-0003	Drag screw
49	B77-0301	Drag washer spring
50	B83-9601	Drag knob
51	352-1105	Drag knob screw
52	B74-3701	Oscillating gear
53	B84-3901	Bearing
54	B83-6801	Drive gear
55	373-7800	Drive gear washer
56	B84-3901	Bearing
* 57		Body cover
58	B83-5001	Body cover screw
59	B91-3301	Handle
60	B85-0801	Handle collar
61	B90-3301	Handle screw
62	B68-2602	Handle screw cap

SGA2055 Special Parts

1	B84-2501	Spool
7	B82-2101	Rotor
8	B83-7301	Bail kick lever
18	B84-0201	Bail
36	B83-5903	Body
57	B83-6903	Body cover
59	B83-7103	Handle

Order by model and part name due to color change.